Ledvance | PAR16 | Dimmable LED Lamp | GU10 | 350lm | CRI90 | 4000K

LED-457562 / ITM002295



Datasheet

23-10-2026

Ledvance | PAR16 | Dimmable LED Lamp | GU10 | 350lm | CRI90 | 4000K



Bulb Cap	CRI	Material	Warranty
GU10	>90	Glass	5 Years

SKU: LED-457562
ITM: ITM002295

Key Features:

- **Light Colour:** Natural White
- **Equivalent Wattage:** 50W

Mechanical Data			
Base Type:	GU10	**Diffuser Material:**	Glass
LED Chip Brand:	Lumileds/Seoul	**LED Chip Type:**	2835
Product Weight:	39g		

Electrical Data			
Equivalent Wattage:	50W	**Wattage:**	3.7W

Input Data			
Input Frequency:	50Hz	**Input Voltage:**	220V - 240V

Control Data			
Dimmable:	Yes	**Dimming Range:**	25% - 100%
Dimming Type:	TRIAC		

Photometric Data			
CCT:	4000K	**CRI:**	90
Diffuser Colour:	Frosted	**Diffuser Finish:**	Frosted
Light Colour:	Natural White	**Lumen Total:**	350Lm
Lumens Per Watt:	94Lm/W	**Luminous Intensity:**	640cd
Bulb Colour:	Neutral White		

Environmental Data	
Body Material:	Glass

Efficiency Data			
Lumen Maintenance Factor:	0.96	**Rated Life:**	25000 Hours
Startup Time:	0.5 Secs	**Switch Cycles:**	100000

Dimension Drawing

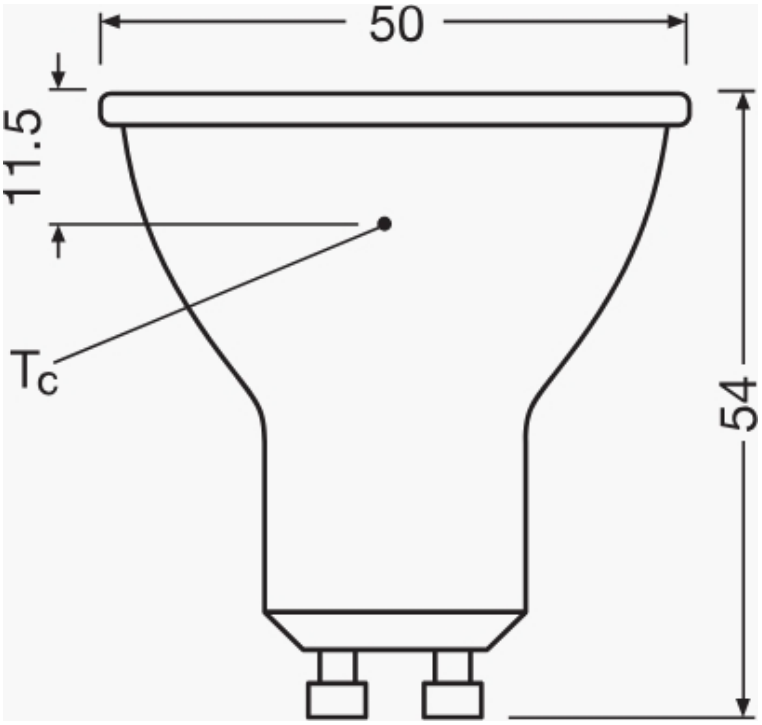

Packaging Data			
Packaging Height:	60mm	**Packaging Length:**	52mm
Packaging Width:	52mm		

Disclaimer

Tagra Lighting have taken reasonable care to ensure that the information in this datasheet is accurate at time of publication however it should be noted that all specifications are subject to tolerance. Descriptive specifications such as colour are subjective. Tagra Lighting reserve the right to update specifications without notice. The information in the datasheet may only be relied on by customers of Tagra Lighting in accordance with applicable terms and conditions.

Tagra Lighting is a trading name of T.R Ventures Limited, a company incorporated in England with registered number 07757720. Our registered office is Unit 2, Southfield Industrial Estate, Trafford Park, M17 1SJ.

www.tagra-lighting.co.uk

support@tagra-lighting.co.uk